Chemical Engineering Science 144 (2016) 336–345

Contents lists available at ScienceDirect

Chemical Engineering Science

journal homepage: www.elsevier.com/locate/ces

Dynamic exergy method and its application for CO_2 compression and purification unit in oxy-combustion power plants

Bo Jin, Haibo Zhao*, Chuguang Zheng

State Key Laboratory of Coal Combustion, Huazhong University of Science and Technology, Luoyu Road 1037, Wuhan, Hubei 430074, People's Republic of China

HIGHLIGHTS

- A systematic dynamic exergy method is proposed and examined.
- Dynamic exergy calculation and dynamic exergy evaluation procedures are included.
- Dynamic exergy property and sensitivity of operating parameters can be obtained.
- The effects of closed-loop control system on system performance can be quantified.
- Dynamic exergy performance for CO_2 compression and purification unit is acquired.

ARTICLE INFO

Article history:
Received 16 August 2015
Received in revised form
21 December 2015
Accepted 21 January 2016
Available online 3 February 2016

Keywords:
Dynamic simulation
Exergy
CO_2 compression and purification unit
Carbon capture
Process control

ABSTRACT

A systematic dynamic exergy method is proposed for identifying exergy performance dynamically to achieve efficient operation, and then examined through its applications for air compression process and CO_2 compression and purification unit (CPU). In this method, the dynamic exergy calculation is based on complicated coupling procedures among steady-state simulation, dynamic simulation, and exergy calculation. Then, dynamic exergy property, energy consumptions for operating conditions, sensitivity of operating parameters, and the effect of control system can be acquired in the dynamic exergy evaluation. It is found that the proposed dynamic exergy method would be a powerful tool to uncover important information for operators and engineers. From the results of CPU, flue gas composition ramp up process runs more effectively than that of flow rate ramp down and composition ramp down processes. CPU is more sensitive to the variation of flue gas composition than that of flue gas flow rate since smaller sensitive factor is obtained in the latter case. Control system saves energy during flue gas composition ramp down process however consumes energy in flow rate ramp down and composition ramp up processes. Meanwhile, smaller control costs are required for flue gas flow rate ramp case than that of composition ramp case.

1. Introduction

Exergy, as a second law of thermodynamics concept, is a measure of the departure of system state from environment state (Bejan et al., 1996). It has been widely used as a powerful tool to identify thermodynamic performance, economic aspects, environmental impacts, and sustainable development for a specific system (Dincer, 2002). To assess the thermodynamic behavior, exergy analysis method can be applied to identify system efficiency and locate potential energy savings through obtaining exergy efficiency and the distribution of exergy destruction (Bejan et al., 1996). When introducing economic cost concept into exergy, thermoeconomic analysis (Valero et al., 2006b; Xiong et al., 2012b) can be formed to provide the engineers with information, which is not available through conventional exergy analysis and economic evaluation but crucial to the design and operation of a cost effective system. Then, malfunctions and degradations in the system can be discovered and quantified through thermoeconomic diagnosis (Valero et al., 2006a), whilst optimal operations and performance can be recognized by thermoeconomic optimization (Bejan et al., 1996; Valero et al., 2006a; Xiong et al., 2012a). In addition, exergy can be suggested as the most appropriate method to uncover environmental impacts, since reducing exergy losses would be effective to achieve energy security and improve pollution control technologies (Rosen and Dincer, 1999). Furthermore, exergy can be combined with life cycle assessment to form

* Corresponding author. Tel.: +86 27 87542417 8208; fax: +86 27 8754 5526.
E-mail addresses: klinsmannzhb@163.com, hzhao@mail.hust.edu.cn (H. Zhao).

http://dx.doi.org/10.1016/j.ces.2016.01.044
0009-2509/

exergoenvironmental analysis (Meyer et al., 2009) for evaluating the location, magnitude, and sources of the environmental impacts associated with energy conversion systems. When environmental impacts are minimized and sustainable energy sources are supplied, sustainable development can be obtained and improved (Dincer and Rosen, 2004).

Despite the above applications, exergy can also be used to connect between thermodynamics and process control. Dynamic exergy balance and system settling time equations were developed to reflect the controllability of a process (Luyben et al., 1999). Relative exergy array (Montelongo-Luna et al., 2011) and relative exergy destroyed array (Munir et al., 2013b) were proposed based on the concept of relative gain array (Bristol, 1966) to quantify control pairings for choosing eco-efficiency process design and control. While, the thermodynamically efficient control pairings would not be guaranteed for a reliable controllability. To obtain the eco-efficiency control configuration and robust controllability simultaneously, dynamic simulation is recommended to demonstrate the aforementioned control pairing results. From the dynamic exergy performance based on the potential control configurations, their total exergy destructions can be compared to determine a desired control pairing (Munir et al., 2013a). Unfortunately, dynamic exergy value cannot be directly obtained from dynamic simulation results. An exergy eco-efficiency factor (Munir et al., 2012) was proposed to complete the validation process. However, in this work, the exergy results in the dynamic simulation were simply calculated using steady state results with large errors. Moreover, the defined exergy evaluation factor could not be interpreted with a definite physical prospect. Therefore, an accurate and systematic method in dynamic simulation aiming to gain dynamic exergy performance and evaluation factors should be developed to evaluate system performance for achieving reasonable and efficient operation. Control system is often configured in a chemical plant to maintain the product quality, however, limited information for the impacts of control system on system operation from the prospective of energy performance is presented. Thus, it is critical to clarify the function of control system during different operating conditions for optimizing control system and system operation.

The purpose of this study is to find a systematic dynamic exergy method to acquire dynamic performance of exergy parameters for a process or system, which then can be helpful for guiding operators and engineers to achieve thermodynamically efficient operation. A dynamic exergy method is proposed with systematic procedures (dynamic exergy calculation and dynamic exergy evaluation) and several well-defined evaluation parameters. To validate its effectiveness, the proposed dynamic exergy method is applied to two processes: air compression and CO_2 compression and purification unit (CPU) in oxy-combustion power plants. Detailed dynamic exergy performances for the two systems are analyzed comprehensively by identifying their dynamic exergy property, energy consumptions for operating conditions, sensitivity of operating parameters, and the effects of control system on system performance during different operating scenarios.

2. Methodology

Essentially, the basic idea of dynamic exergy concept is that stream, device, and system would have the corresponding stream exergy, power, and exergy parameters for describing the thermodynamic performance of system, respectively, at every time point (t) when system operates from one state to another during an appropriate time period. For an open system, the dynamic exergy balance can be formulated as: (Bejan et al., 1996; Luyben et al., 1999)

$$\frac{\mathrm{d}E(x(t))}{\mathrm{d}t} = \left[E_{\mathrm{f}}(t) + \dot{w} + \sum \dot{q}(T_i - T_0)/T_i\right]_{\mathrm{in}} - \left[E_{\mathrm{f}}(t) + \dot{w} + \sum \dot{q}(T_i - T_0)/T_i\right]_{\mathrm{out}} - T_0\dot{\sigma}(x(t)) \quad (1)$$

where, $\mathrm{d}E(x(t))/\mathrm{d}t$ means rate of exergy change or accumulation within system, $E_{\mathrm{f}}(t)$ stands for exergy flows carried by fluid streams entering or leaving system, $\dot{w}$ represents mechanical power delivered to or derived from system, $\dot{q}_i$ illustrates heat input (or removal) rate from source i, and $\dot{\sigma}(x(t))$ indicates total entropy production rate as a result of running process, respectively. When system operation is under non-steady state, the exergy flows for two adjacent time points (t and $t+\mathrm{d}t$) would have a difference $\mathrm{d}E$. The choice of time step (Δt) is determined by the accuracy for description of system, which means that the dynamic exergy curve for system operation would be more accurate when the time step is smaller. When system operates under steady state, the thermodynamic performance would remain unchanged since exergy flows are identical at two adjacent time points. Calculating exergy parameters at every time point would form the exergy curves as a function of time for stream, device, and system. From these dynamic exergy plots, operating conditions for stream, device and system can be compared through the exergy values at two different time points, energy consumptions of operating scenarios for stream, device, and system can be obtained by counting the areas under exergy curves, and then control structures and their effects on system operation can be compared and analyzed, respectively.

As illustrated in Fig. 1, a systematic dynamic exergy method is proposed to identify the above dynamic features for system to achieve effective and efficient operation. This method can be divided into two steps: dynamic exergy calculation and dynamic exergy evaluation.

2.1. Dynamic exergy calculation

In the dynamic exergy calculation, it aims to get the exergy parameters at every time points under different operating scenarios, and then draw the curves of exergy parameter as a function of time. It mainly includes three parts: steady-state model and simulation, dynamic model and simulation, and exergy calculation. At the beginning, the steady-state model for a chemical plant is established, and design data is used to validate the steady-state simulation (here, Aspen Plus is adopted) results. In order to obtain thermodynamic data at every time point when system operation switches from one state to another, steady-state model should be exported to dynamic model (here it is established in Aspen Plus Dynamics) through accomplishing dynamic simulation preparations (Jin et al., 2015a, 2014b; Luyben, 2002) which consists of choosing the type of dynamic simulation, adding or removing necessary connections, and estimating the geometric sizes of equipment for dynamic inputs. To maintain system operation around optimal conditions, closed-loop control system should be designed and configured in the dynamic model to identify the dynamic behavior under different operating scenarios. From dynamic simulation results, dynamic responses of the thermodynamic parameters including temperature, pressure, flow rate, composition, and power for system configured with closed control system at every time point during different operating scenarios can be obtained. When operating demands put into steady-state model where control system is not considered, it can obtain the thermodynamic parameters including temperature, pressure, flow rate, composition, and power for system without control system at every time point during different operating scenarios.

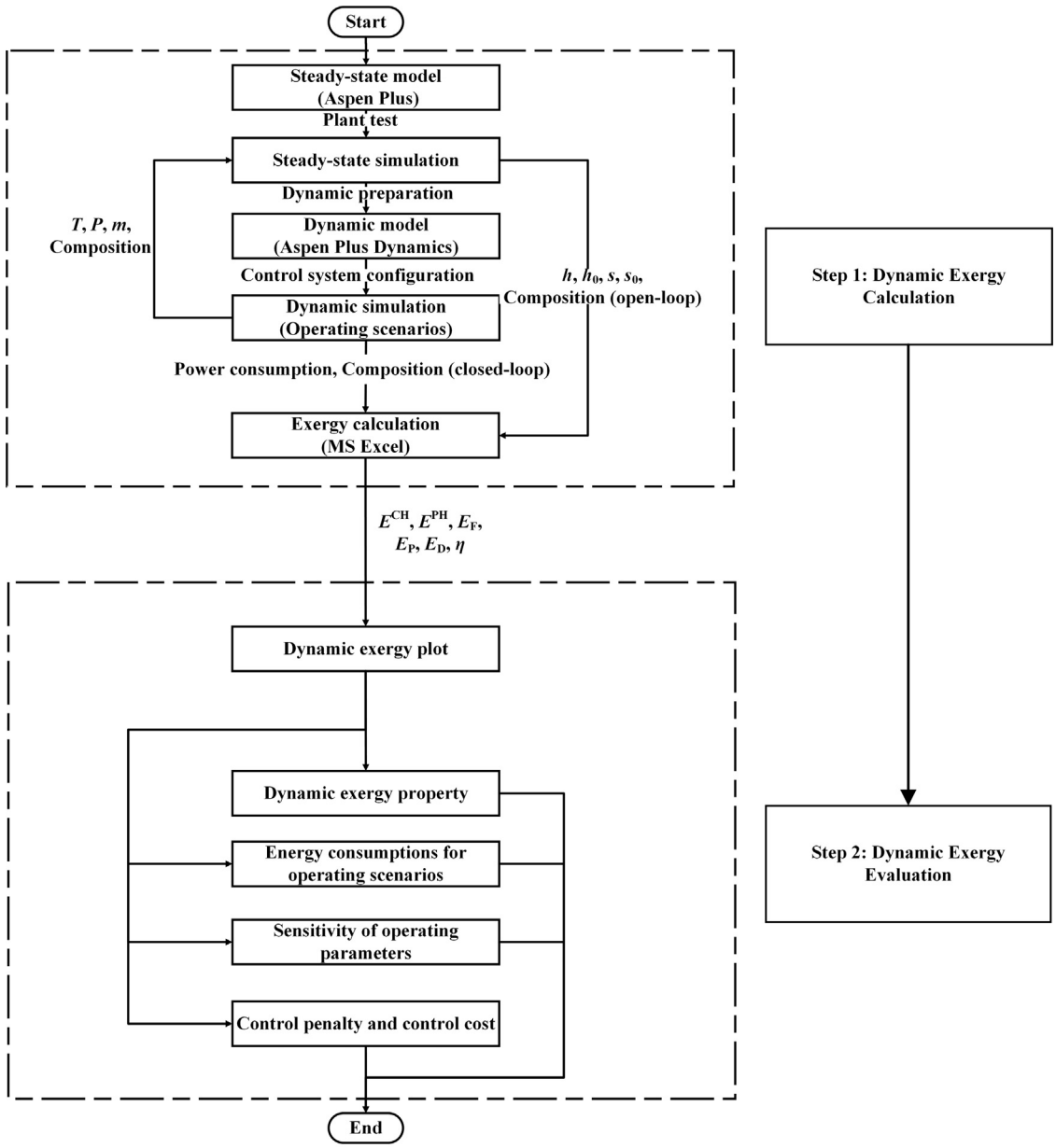

Fig. 1. Systematic procedures for implementing dynamic exergy method.

After obtaining the required thermodynamic information from the above simulations, exergy calculation can be implemented through the calculation program written in Microsoft Excel. To reflect system operation, physical exergy (E^{PH}), chemical exergy (E^{CH}), fuel exergy (E_F), product exergy (E_P), exergy destruction (E_D), and exergy efficiency (η) are introduced, calculated and plotted as dynamic exergy curves. E^{PH} is defined as the maximum theoretical useful work obtained as a system passes from its initial state (T and P) to the environment state (T_0 and P_0), which can be calculated by Eq. (2) (Bejan et al., 1996; Xiong et al., 2011). E^{CH} arises from the departure of the chemical composition of a system from the environment, which can be determined from Eqs. (3) and (4) (Bejan et al., 1996; Xiong et al., 2011). Eq. (3) is used to calculate the chemical exergy for a gaseous component in the reference environment model, whilst the chemical exergy for a gaseous mixture is calculated via Eq. (4). The total exergy of a stream is the sum of physical exergy and chemical exergy, which can be expressed as Eq. (5) (Bejan et al., 1996; Xiong et al., 2011).

$$E^{PH} = m[(h-h_0)-T_0(s-s_0)] \tag{2}$$

$$E^{CH} = m[-RT_0 \ln x^0] \tag{3}$$

$$E^{CH} = m\left[\sum x_k e_k^{CH} + RT_0 \sum x_k \ln x_k\right] \tag{4}$$

$$E_{stream} = E^{PH} + E^{CH} \tag{5}$$

where the subscript "0" and "k" stand for the reference state (Gaggioli and Petit, 1977) and the gaseous component in the mixture, h and s mean the unit enthalpy (kJ/kmol) and unit entropy (kJ kmol^{-1} K^{-1}), R is the gas constant, 8.314 J K^{-1} mol^{-1}, x^0 represents the mole fraction of the gaseous component in the environment model, and x^k illustrates the mole fraction of the gaseous component k, respectively.

For determining the exergy destruction (E_D) and exergy efficiency (η), it is necessary to identify fuel, irreversibility and

product for the thermodynamic system being analyzed. The fuel represents the resources required to generate the product and is not necessarily restricted to being an actual fuel such as gas, oil, or coal, whilst the product means the desired result produced by the system. The irreversibility derives from losses caused by transfer from system to ambient (external loss) and thermodynamic or economic constraints (internal loss). As measured in terms of exergy, fuel, irreversibility, and product can be expressed as fuel exergy (E_F), exergy destruction (E_D), and product exergy (E_P), respectively. Among these four parameters, their correlations can be presented as below (Bejan et al., 1996; Jin et al., 2015d; Xiong et al., 2011)

$$E_D = E_F - E_P \tag{6}$$

$$\eta = E_P / E_F \tag{7}$$

2.2. Dynamic exergy evaluation

From the aforementioned exergy calculation results, dynamic exergy responses versus time under different operating scenarios can be plotted. In the dynamic exergy plot, dynamic exergy property for the system can be obtained directly to identify thermodynamic performance in real-time, which mainly includes the dynamic variations of total fuel exergies, total product exergies, total exergy destructions, and exergy efficiencies. Then, energy consumptions for operating conditions at different time periods can be calculated through counting areas under the curves. Areas under dynamic curves of total fuel exergies, total product exergies, and total exergy destructions reflect energy inputs from fuels, energy outputs from products, and energy consumptions caused by irreversibility, respectively. They can be formulated as below.

$$\alpha_i = \int_{t_0}^{t_1} E_i(t)dt \tag{8}$$

in which, α means energy (kW h), t illustrates different time points, subscript 0 stands for the initial time point and 1 for the final time point, and i represents different exergy types (i.e., fuel exergy, product exergy, and exergy destruction), respectively. Based on the calculated energy consumptions, a sensitive factor β expressed in Eq. (9) can be introduced to justify the sensitivity of operating parameters. It aims to identify the influence level of operating parameters on system operation, which indicates the amount of unit output varies when input changes with one unit variation.

$$\beta = \left| \left(\frac{dy}{y_0}\right) / \left(\frac{du}{u_0}\right) \right| \tag{9}$$

where, β is the non-dimensional number, y means output (here, it is the energy consumption which can be derived from area under the curve of exergy destruction, dy means energy consumption from the time of giving input demand to the time of system operating at steady state finally), y_0 represents energy consumption during the varied time period when system operates at initial steady-state, u illustrates input (here, it is the variable for implementing the operating demand), u_0 stands for initial value of input, respectively. The higher value of this parameter implies that the system performance is more sensitive to the corresponding operating parameter. On the other hand, the effects of closed-loop control system on system performance, considered as control penalty and control cost, can also be quantified through calculating the total energy inputs, outputs and consumptions under both open-loop and closed-loop controls simultaneously. The control penalty is defined as the difference between the total energy consumptions under open-loop and closed-loop controls, which can be expressed as below.

$$\Delta\alpha = \alpha_{D\_closed} - \alpha_{D\_open} \tag{10}$$

where, $\Delta\alpha$ has positive and negative signs ("−" means that closed-loop control offers favorable influence on system performance while "+" indicates an opposite meaning). It reveals that control system saves energy (i.e. "−") or consumes energy (i.e. "+") for system performance. Based on concept for identifying the cost of control system on thermoeconomic diagnosis (Verda et al., 2004), the control cost can be defined analogously as below.

$$k = \left| \frac{\alpha_{F\_closed} - \alpha_{F\_open}}{\alpha_{P\_closed} - \alpha_{P\_open}} \right| \tag{11}$$

in which, the numerator equals to the total fuel impacts whilst the denominator means the total product impacts, calculated as the difference between their values (energy inputs and outputs) at the constrained (closed-loop) and free (open-loop) conditions, respectively. This parameter manifests the relationships between fuel impacts and product impacts, which indicates that the required control efforts to maintain product quality when fuel input is deviated from the designed condition. The higher value of this parameter means that operator should pay more attention to the corresponding operating parameter to obtain safe and robust operation.

3. Case study 1: air compression process

As shown in Fig. 2, a single compressor with a flow rate control loop (FC_COM) is used to boost air pressure from 1 atm to 2.5 bar. The detailed procedures for executing the proposed dynamic exergy method are explained for this simple process in the following.

Step 1: dynamic exergy calculation

To obtain the required thermodynamic data for dynamic exergy calculation, steady-state model and simulation, dynamic model and simulation, and exergy calculation should be completed.

3.1. Steady-state model and simulation

Steady-state model for this air compression process can be modeled through mathematical modeling or well-established model in the commercial simulation tool. Here, a "compressor" model in the Aspen Plus is used to represent this process, in which the isentropic efficiency and mechanical efficiency are 0.85 and 0.98, respectively. Detailed information for this steady-state simulation is presented in the Fig. 2. This procedure mainly aims to get the thermodynamic data under open-loop control during operating scenarios using the input change demands as discussed in the next step.

3.2. Dynamic model and simulation

Completing the dynamic preparations, the steady-state model for compression is exported to dynamic model in Aspen Plus Dynamics. A flow control loop is configured in this dynamic model via manipulating its brake power. Then, tow operating scenarios including flow rate and temperature ramp change processes are investigated. In flow rate change process, inlet flow rate decreases from 100 kmol/s to 80 kmol/s whilst other conditions such as temperature, composition and pressure are unchanged during 5th minute to 10th minute. It then leads to the decrease of power consumption in compressor from 30,651.20 kW to 24,520.70 kW. Also during the same time period, power consumption increases about 1.68% and outlet temperature increases about 6.66 °C when inlet temperature changes from 25 °C to 30 °C whilst other

parameters are maintained constant. The key feature for this step is to gain the required thermodynamic information as a function of time under closed-loop control (FC_COM) during flow rate and temperature change cases.

3.3. Exergy calculation

Based on the above thermodynamic data under closed-loop and open-loop controls, stream exergy can be calculated using Eqs. (2)–(7). The fuel exergy consists of inlet stream exergy (2.46%) and power consumption required in compressor (97.54%), while the product exergy is the exergy of outlet stream. Exergy destruction is the difference between fuel exergy and product exergy, whilst exergy efficiency is the ratio of product exergy to fuel exergy. After calculating these parameters at every time point, dynamic exergy plots of fuel exergy, product exergy, exergy destruction, and exergy efficiency can be formed.

Step 2: dynamic exergy evaluation

According to these dynamic exergy plots, dynamic exergy assessment for system performance can be accomplished as follows.

3.4. Dynamic exergy property

As manifested in Fig. 3, fuel exergy decreases about 6285.09 kW since the decrease of inlet stream flow rate contributes to the reductions of inlet stream exergy and power consumption in compressor. Product exergy reduces about 5479.27 kW because the decrease of outlet stream flow rate also leads to the decrease of outlet stream exergy. For exergy destruction and exergy efficiency, their dynamic behavior is the results of fuel exergy and product exergy, in which the former decreases about 20.00% and the latter increases very slightly. Comparing between closed-loop and open-loop controls, it finds that the differences for exergy parameters (except for exergy efficiency) are very small because flow control loop is tight and easy for realization.

As inlet temperature increases, as shown in Fig. 4, fuel exergy increases about 1.67% whilst product exergy gets an increase of 1.88%. For fuel exergy, it results from the increment of inlet physical exergy (the chemical exergy is constant because the flow rate and composition are unchanged) and power consumption in compressor. With respect to the increase of product exergy, it is ascribed to the increase of outlet physical exergy. Exergy destruction increases about 10.78 kW whilst exergy efficiency increases about 0.18 percent point, which is attributed to the variations of fuel exergy (+525.98 kW, +1.67%) and product exergy (+515.20 kW, +1.88%).

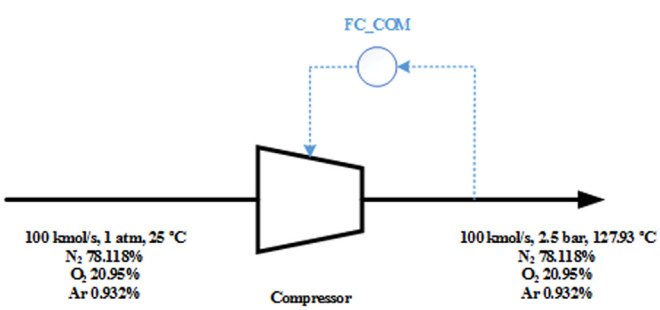

Fig. 2. Air compression process.

3.5. Energy consumptions for operating scenarios

Based on Eq. (8), energy inputs, energy outputs and energy utilization ratios are summarized in Table 1. Compared with the two cases, temperature change case consumes larger energy inputs and produces more energy outputs, which then leads to higher energy utilization ratio than that in flow rate change case. Since flow control loop is configured and acted on the brake power of compressor, higher energy utilization ratio is found in closed-loop case than that of open-loop case.

3.6. Sensitivity of operating parameters

Calculated from Eq. (9), the sensitivity of operating parameters is listed in Table 2. It is found that system operation is more sensitive to the variation of temperature than that of flow rate since higher sensitive factor for temperature change case is obtained. When compared between closed-loop and open-loop cases, it indicates that the sensitivity of operating parameters is independent of control system because very small difference is observed for the sensitivity of closed-loop and open-loop cases.

3.7. Control penalty and control cost

Table 3 presents the quantified control effects on system performance as determined from Eqs. (10) and (11). For the two operating conditions, control plays the role of energy savings since

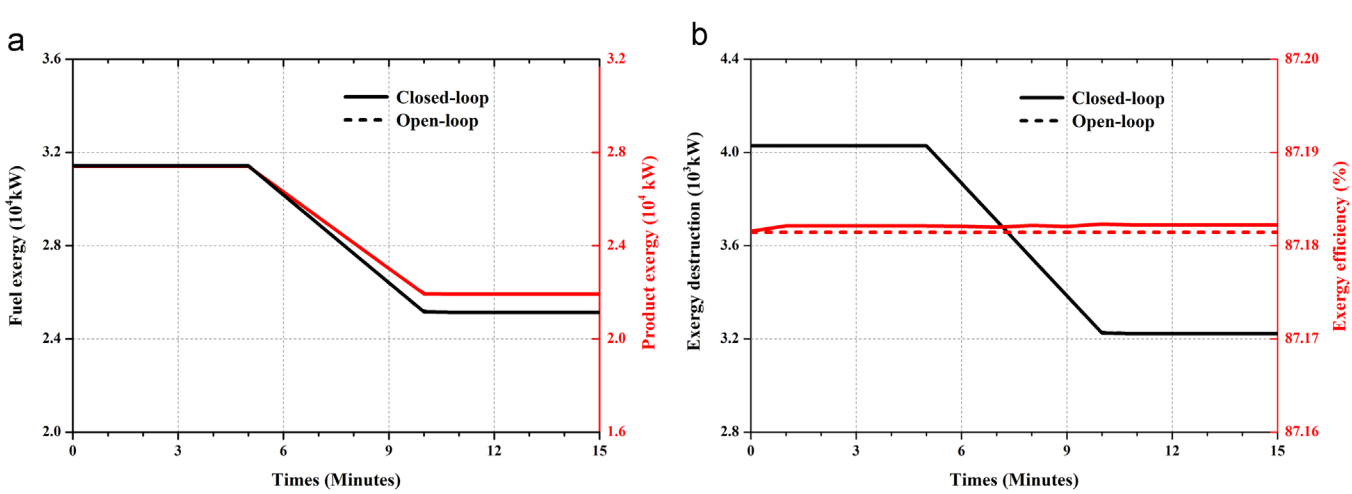

Fig. 3. Dynamic exergy plots of compressor under flow rate change process. (a) Fuel exergy (in black) and product exergy (in red), (b) Exergy destruction (in black) and exergy efficiency (in red). (For interpretation of the references to color in this figure legend, the reader is referred to the web version of this article.)

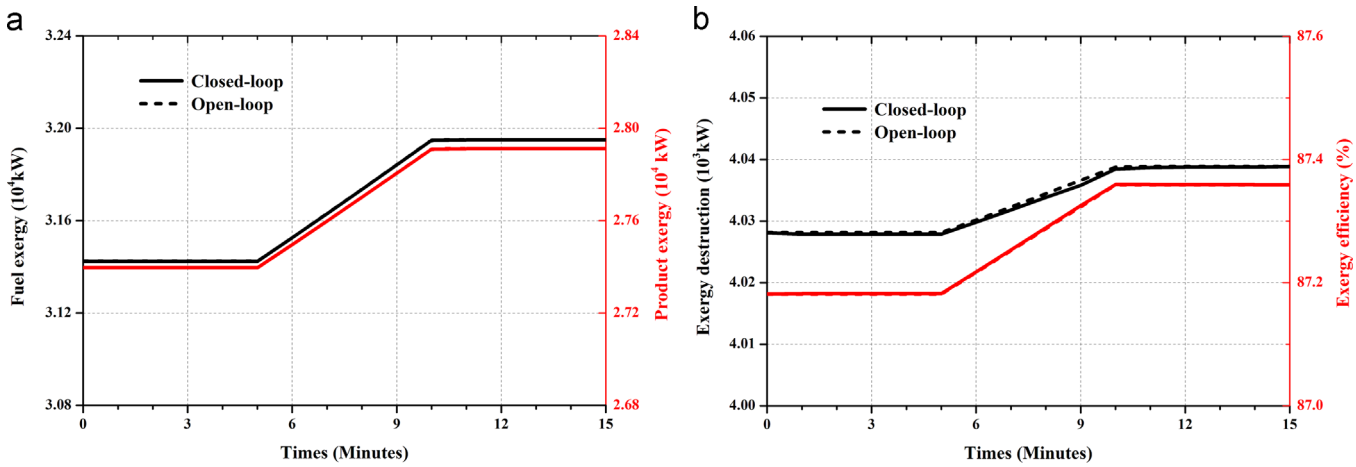

Fig. 4. Dynamic exergy plots of compressor under temperature change process. (a) Fuel exergy (in black) and product exergy (in red), (b) Exergy destruction (in black) and exergy efficiency (in red). (For interpretation of the references to color in this figure legend, the reader is referred to the web version of this article.)

Table 1
Energy inputs and outputs for two operating scenarios.

Energy, kW h	Open-loop			Closed-loop		
	Input	Output	Ratio	Input	Output	Ratio
Flow rate change	7071.63	6165.15	87.1814	7071.56	6165.14	87.1821
Temperature change	7921.56	6913.20	87.2706	7921.45	6913.16	87.2714

Table 2
Sensitive factors for two operating conditions.

Case	β	
	Open-loop	Closed-loop
Flow rate change	4.50192	4.50189
Temperature change	5.0077	5.0082

Table 3
Energy consumptions, control penalties and control costs for two operating scenarios.

Energy consumption, kW h	Open-loop	Closed-loop	$\Delta\alpha$	k
Flow rate change	906.48	906.42	−0.059	4.87
Temperature change	1008.37	1008.29	−0.074	–

control penalties are negative. As only flow control is considered, control cost during flow rate change process is calculated as 4.87. It reveals that the required control efforts to maintain product quality when flow rate is deviated from the initial condition. It can also be used to identify which operating parameter should be paid more attention during operations, which it has been discussed in the next CPU example.

4. Case study 2: CO_2 compression and purification unit

Fig. 5 shows the process flow diagram of a CPU (Jin et al., 2015b,c) in oxy-combustion power plant. It primarily consists of three-stage CO_2 compressor with intercoolers (MCC), cold box (including first multi-stream heat exchanger (E1), first flash separator (F1), second multi-stream heat exchanger (E2), second flash separator (F2)), compressor (C) and after-cooler (Cooler)). The feeding flue gas is compressed to 30 bar and then sent to cold box for removing impurities. In the first flash separation, flue gas is passed through E1 and cooled down to −24.64 °C before entering into F1. In such a way, the liquid CO_2 products are gained at the bottom whilst the top stream is cooled continually to −55 °C and sent to F2 in the second flash separation; the second flow of CO_2 products is obtained from the F2 bottom and vent gas is emitted from the F2 top. Finally, the second CO_2 product is boosted and mixed with the first CO_2 products for storage or utilization.

Step 1: dynamic exergy calculation

The proposed dynamic exergy method is also applied to this complex chemical process to validate its powerful function on assessing system performance to achieve efficient operation.

4.1. Steady-state model and simulation

As discussed in our previous studies (Jin et al., 2015b,c), steady-state model for CPU is established in Aspen Plus and Table 4 summarizes key boundary conditions for completing steady-state simulation. Detailed information can refer to our previous studies where single variable analysis, exergy analysis, techno-economic evaluation, thermoeconomic cost analysis, and multi-variable optimization were investigated to identify the comprehensive characteristics of CPU. When operating demands (discussed in the next step) put into steady-state simulation, thermodynamic data under open-loop control is obtained.

4.2. Dynamic model and simulation

From our previous study (Jin et al., 2015b), dynamic model for CPU with an optimal operating condition was built in Aspen Plus Dynamics. After designing a closed-loop control system based on a systematic "top-down analysis, bottom-up design" method (Jin et al., 2014a; Skogestad, 2004), dynamic simulations were conducted during flue gas flow rate change and flue gas composition change processes. In the proposed double temperature control system (Jin et al., 2015b), CO_2 product purity control (CC_CO_2), CO_2 recovery rate control (CC_CRR), and stream temperature controls (TC_S8 and TC_S18) are configured in supervisory control layer to achieve CO_2 product quality and avoid CO_2 freezing point. Meanwhile, flow controls (FC_FG and FC_CO_2), level controls (LC_F1 and LC_F2), temperature controls (TC_MCC and TC_Cooler), and pressure control (PC_F) are established in regulator control layer to maintain desirable operation. Dynamic behavior of thermodynamic parameters has been presented in

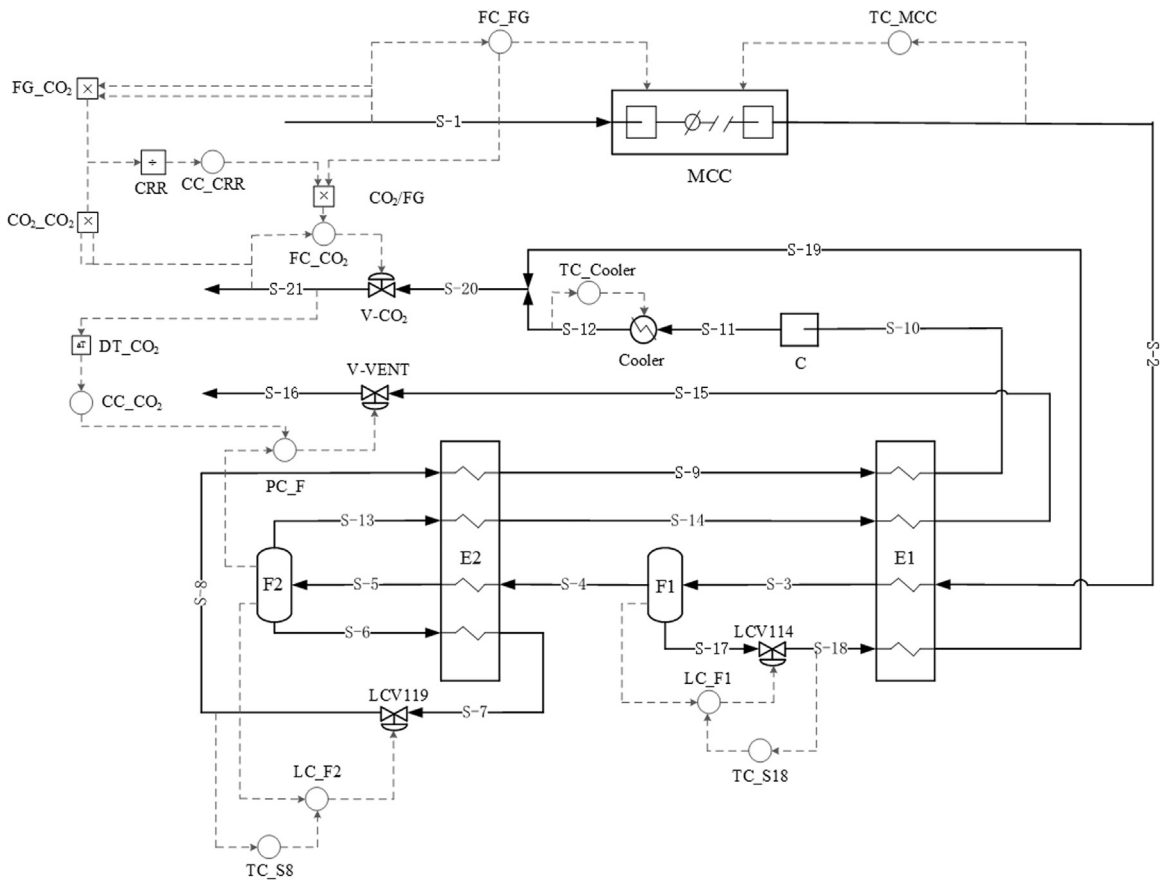

Fig. 5. CO_2 compression and purification unit with double temperature control structure.

Table 4
Key operating parameters for CPU.

Operating parameter	Value
Compressor isentropic efficiency	0.80
Compressor mechanical efficiency	0.98
Pressure drops in E1, bar	0.28/0.21/0.27/0.21 (S-2/S-9/S-14/S-18)
Pressure drops in E2, bar	0.27/0.21/0.20/0.28 (S-4/S-6/S-8/S-13)
Temperature in flash separators, °C	−24.64/−55 (F1/F2)

that study, which provides the required thermodynamic data for dynamic exergy calculation under closed-loop control.

4.3. Exergy calculation

Based on Eqs. (2)–(7) and the required thermodynamic information, exergy parameters for CPU are determined. Fuel exergy consists of power consumption in compressors (47.28%) and the exergy of flue gas (52.72%), whilst product exergy is the exergy of CO_2 product. The initial values for exergy destruction and exergy efficiency are 47,971.54 kW and 66.66%, respectively. Then, the combination of the results at every time point can form the exergy curves as function of time to lay foundation for dynamic exergy evaluation.

Step 2: dynamic exergy evaluation

Figs. 3–5 present dynamic exergy plots for CPU under the flue gas flow rate ramp down, flue gas composition ramp up, and flue gas composition ramp down processes, which then can be used for manifesting the following four characteristics: dynamic exergy property, energy consumptions for operating scenarios, sensitivity of operating parameters, and control penalty and control cost.

4.4. Dynamic exergy property

During the flue gas flow rate ramp down process from 100% to 80% with rate of 2%/min, dynamic exergy properties of fuel exergy, product exergy, exergy destruction, and exergy efficiency for the CPU are shown in Fig. 6. Apart from the exergy efficiency under the open-loop control which is unchanged, other exergy parameters for the open-loop and closed-loop controls follow with the variations of flue gas flow rate. For dynamic exergy responses, the decreases of fuel exergy and product exergy derive from the decrease of flue gas flow rate which then leads to the decreases of power consumptions in MCC (18.94%), the exergy of flue gas (20.00%) and the exergy of CO_2 product (20.00%), while the changes of exergy destruction and exergy efficiency are attributed to the larger reduction of fuel exergy (19.07%) than that of product exergy (20.00%). When compared with dynamic exergy performance between open-loop and closed-loop controls, their differences are mainly ascribed to the flow controls on flue gas and CO_2 products (FC_FG and FC_CO_2). The deviation of fuel exergy mainly comes from power consumption in MCC moderated by flue gas flow control (FC_FG), however, the deviation of product exergy primarily results from CO_2 product flow rate controlled by CO_2 product flow control (FC_CO_2). Due to different changes in fuel and product exergies generated by control actions, about 3.66% more exergy destructions are produced, resulting in exergy efficiency decreases about 1.06 percent points under the closed-loop control when compared to those in the open-loop control.

Fig. 7 gives dynamic exergy behavior for CPU during the flue gas composition ramp up case where CO_2 mole fraction increases about 5% whilst other impurities (O_2, Ar, N_2, CO, SO_x, and NO_x) decrease simultaneously in order to maintain the sum of mole fraction equals to unity. With the increase of CO_2 content in flue

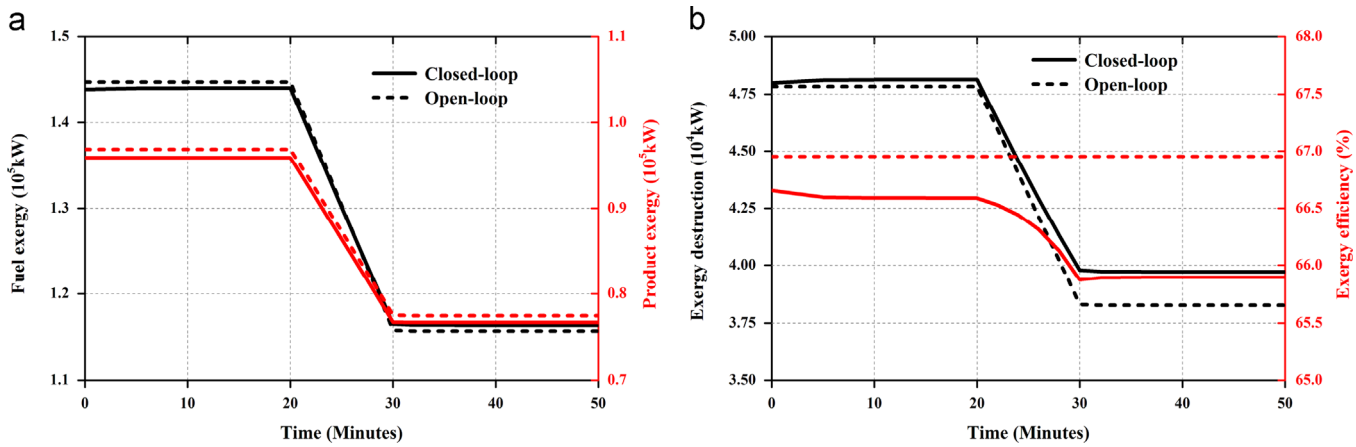

Fig. 6. Dynamic exergy plots of CPU under the load change case. (a) Fuel exergy (in black) and product exergy (in red), (b) Exergy destruction (in black) and exergy efficiency (in red). (For interpretation of the references to color in this figure legend, the reader is referred to the web version of this article.)

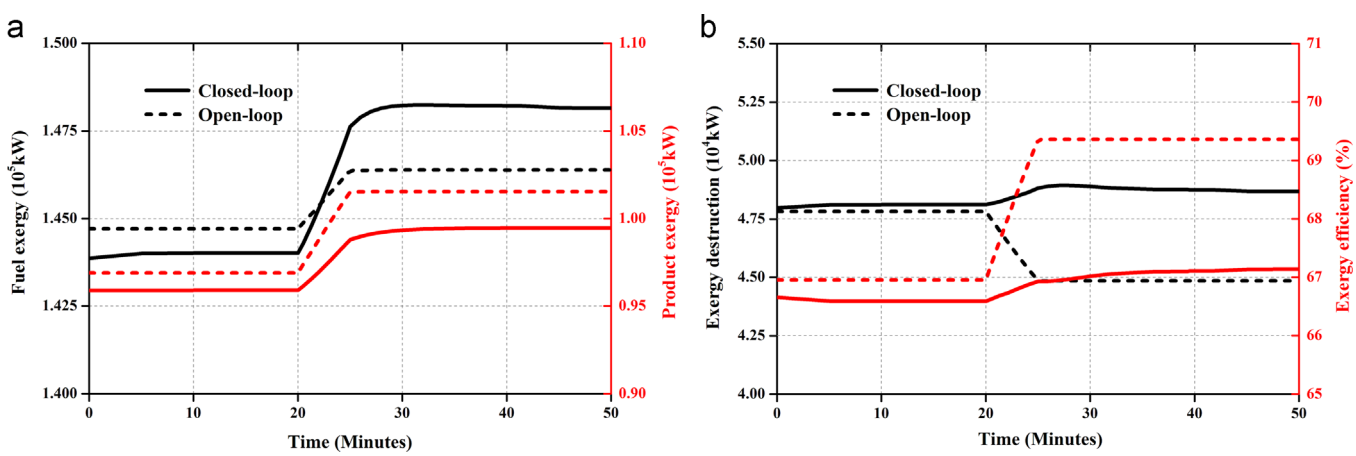

Fig. 7. Dynamic exergy plots of CPU under the flue gas composition ramp up case. (a) Fuel exergy (in black) and product exergy (in red), (b) Exergy destruction (in black) and exergy efficiency (in red). (For interpretation of the references to color in this figure legend, the reader is referred to the web version of this article.)

gas, all the exergy parameters for CPU increase except for exergy destruction in the open-loop control. The increment of fuel exergy originates from the increases of power consumption in MCC ($\pm$1.10%) and the chemical exergy of flue gas ($\pm$4.71%), which indicates that composition plays the dominant role. The increase of product exergy lies in the manipulation from CO_2 recovery rate control, which means that CO_2 product flow rate should be increased to maintain CO_2 recovery rate when flue gas flow rate and CO_2 product purity are controlled by the corresponding control loops. Due to the similar reasons in the flue gas flow rate ramp down case, the smaller increase of fuel exergy (2.97%) than that of product exergy (3.73%) results in the increase of exergy efficiency, and the evolution of exergy destruction is ascribed to that fuel exergy increases 4279.92 kW whilst product exergy gets an increment of 3572.13 kW. Dynamic power response in MCC adjusted via flue gas flow control (FC_FG) contributes to the distinctive performance of fuel exergy between the open-loop and closed-loop controls. Analogous to that of fuel exergy, the difference of product exergy between open-loop and closed-loop controls is ascribed to CO_2 product flow control (FC_CO_2) and CO_2 product purity control (CC_CO_2) actions. Therefore, exergy destruction and exergy efficiency in closed-loop control shows smaller increase than those in open-loop control.

As presented in Fig. 8, dynamic exergy performance for CPU during the flue gas composition ramp down case (where CO_2 mole fraction decreases about 5% whilst other impurities increase simultaneously) manifests nearly opposite way to that of the flue gas composition ramp up case. Due to the decrease of CO_2 content in flue gas, the decreases of the chemical exergy of flue gas (−4.64%) and power consumption in MCC (−0.02%) result in the decrease of fuel exergy. Opposite to that in flue gas composition ramp up operation, the decrease of product exergy rests on the decreases of CO_2 product flow rate, which is the result of CO_2 recovery rate control to maintain CO_2 recovery rate when flue gas flow rate and CO_2 product purity are controlled by the corresponding control loops. With respect to exergy destruction and exergy efficiency, their dynamic performance comes from different variations of fuel and product exergies. It should be noted that the decreases of fuel exergy and exergy efficiency after 45 min are attributed to the unchanged operating temperature, the decrease of system pressure and the decrease of CO_2 content in flue gas as discussed in the previous study (Jin et al., 2015b). Due to similar reasons as analyzed in the second case, the different dynamic exergy behavior between the open-loop and closed-loop controls results from different flow and power performances, that is, whether they are regulated by robust controls.

4.5. Energy consumptions for operating scenarios

From dynamic exergy plots showed in Figs. 6–8 and Eq. (8), energy inputs and outputs for the CPU during three operating scenarios are listed in Table 5. Among three operating conditions,

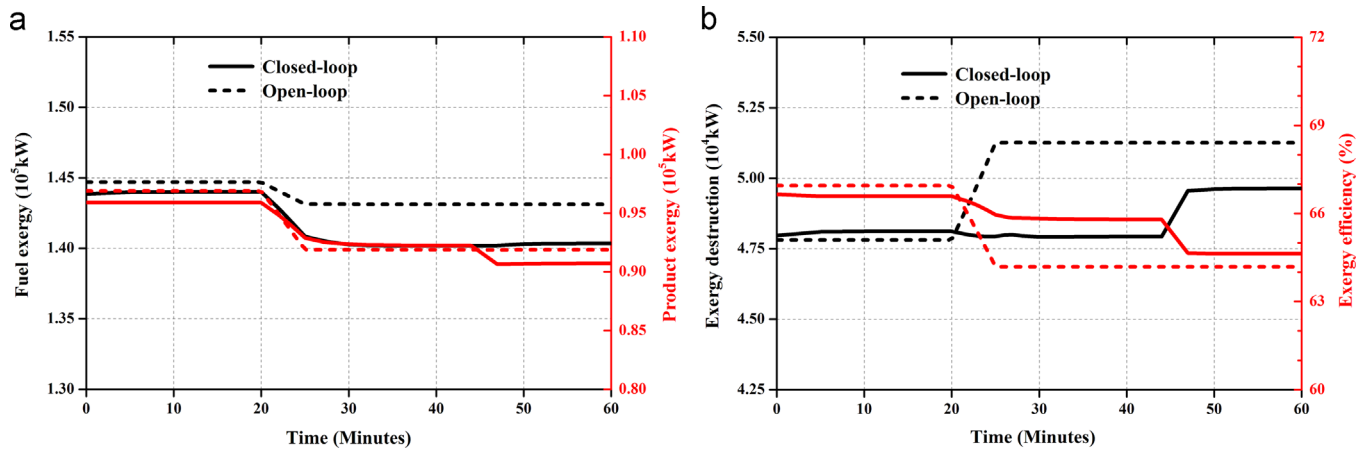

Fig. 8. Dynamic exergy plots of CPU under the flue gas composition ramp down case. (a) Fuel exergy (in black) and product exergy (in red), (b) Exergy destruction (in black) and exergy efficiency (in red). (For interpretation of the references to color in this figure legend, the reader is referred to the web version of this article.).

Table 5
Energy inputs and outputs for three operation scenarios.

Energy, kW h	Open-loop			Closed-loop		
	Inputs	Outputs	Ratio	Inputs	Outputs	Ratio
Flue gas flow rate ramp down	108545.39	72675.36	66.95%	108502.71	71930.47	66.29%
Flue gas composition ramp up	121359.21	82874.64	68.29%	121875.33	81481.07	66.86%
Flue gas composition ramp down	143722.14	93753.19	65.23%	141699.10	93297.67	65.84%

the flue gas composition ramp down process consumes the largest energy inputs and produces the largest energy outputs since its time period lasts about 60 min. When considering the flue gas composition ramp down process under 50 min with the closed-loop control, its energy input and output would be 118,310.74 kWh and 78,181.71 kWh, respectively. From energy utilization ratio, the flue gas composition ramp up case appears to be most effective, compared with other two cases.

4.6. Sensitivity of operating parameters

To identify the sensitivity of operating parameters on system performance, sensitive factors for three cases are calculated from Eq. (9) and summarized in Table 6. It is found that the minimum sensitive factor occurs in the flue gas flow rate ramp down case, which accounts for about 22.62% of the largest sensitive factor in the flue gas composition ramp up process. Moreover, it indicates that system performance is more sensitive to variation of flue gas composition than that of flue gas flow rate, when compared the sensitive factor between the flow rate ramp case and composition ramp case. Although difference occurs in open-loop and closed-loop controls, it has no effects on identifying which operating parameter contributes to more influence on system operation.

4.7. Control penalty and control cost

As discussed in Section 2.2, two evaluation parameters of control penalty and control cost formulated in Eqs. (10) and (11) are introduced to quantify control effect on system performance. Table 7 shows total energy consumptions, control penalties and control costs for three analyzed cases. Control system contributes to about 1567.52 kWh energy savings in the flue gas composition ramp down process, while the control system leads to more energy consumptions in other two cases. It indicates that control system would provide advantageous or adverse effects on system efficiency when operation deviates from the desirable conditions, which mainly depends on plant characteristics and disturbance types. For control cost, the flue gas composition ramp down process spends the maximum cost while the control cost for the flue gas flow rate ramp down case is the minimum. Small control efforts are required to obtain the desirable CO_2 products in the flue gas flow rate ramp down process, because flow rate change has little effect on product quality and control actions are mild. However, to maintain CO_2 product quality when flue gas composition (CO_2 mole fraction) varies $\pm 5\%$, more strong control actions are imposed to the corresponding actuators for dragging operating parameters to their set points. Thus, more attentions should be paid to flue gas composition than that of flue gas flow rate to guarantee safe and robust operation.

Table 6
Sensitive factors for three operating conditions.

Case	β	
	Open-loop	Closed-loop
Flue gas flow rate ramp down	4.50	4.56
Flue gas composition ramp up	19.36	20.14
Flue gas composition ramp down	20.71	19.98

Table 7
Energy consumptions, control penalties and control costs for three operating conditions.

Energy consumption, kW h	Open-loop	Closed-loop	$\Delta\alpha$	k
Flue gas flow rate ramp down	35870.04	36572.24	702.02	0.06
Flue gas composition ramp up	38484.58	40394.26	1909.68	0.37
Flue gas composition ramp down	49968.95	48401.43	−1567.52	4.44

5. Conclusion

Dynamic exergy method is for the first time proposed for identifying dynamic exergy performance of a process or system. In this method, steady-state simulation, dynamic simulation, and exergy calculation are combined to execute dynamic exergy calculation. Then, the dynamic exergy plots can be drawn to implement dynamic exergy evaluation in which dynamic exergy property, energy consumptions for operations, sensitivity of operating parameters, and the effects of closed-loop control system on system performance can be obtained. From dynamic exergy property, thermodynamic performance for system can observed in real-time to provide instructions for operators and engineers. Energy consumptions during different operating scenarios can be used to justify the effective utilization of energy for comparing different cases. Sensitive factor is employed to identify the sensitivity of operating parameters and then attention should be paid to the high sensitive operating parameter. Control penalty and control cost are quantified for a specific operating condition to recognize the control effects (energy saving or energy dissipation) and control efforts (or which operating parameter should be required more attention) on system operation. In general, the application of dynamic exergy method to a system can provide significant information for engineers to achieve efficient and effective operation.

When applied to chemical processes, it is found that the method is very powerful to assess system performance dynamically and efficiently. In air compression process, the dynamic exergy properties for open-loop and closed-loop controls are similar with very small offsets when compared with their curves. The effective use of energy for temperature change case is better than that of flow rate change case since the energy utilization ratio in the former case is larger. Temperature is identified as more sensitive parameter for system operation since the sensitive factor for temperature case is larger than that of flow rate case. Meanwhile, the sensitivity of operating parameters is independent to control loop even though their values for flow rate and temperature changes are different between open-loop and closed-loop controls. Due to the negative value for control penalty is obtained, flow rate control loop exhibits the performance of energy savings during the studied two operating scenarios.

For CO_2 compression and purification unit, its dynamic exergy property representing by the variations of exergy parameters are related to operating conditions (flue gas flow rate and composition changes). Fuel exergy varies with the evolutions of flue gas flow rate, flue gas composition, and power consumption in compressors, while product exergy changes with the variations of CO_2 product flow rate and composition. Exergy destruction and exergy efficiency result from the variations of fuel exergy and product exergy. Compared with energy consumptions among three operating scenarios, the flue gas composition ramp up case appears to be more efficient than that of other two cases since its energy utilization ratio is the largest. As sensitive factor for the flue gas composition ramp case are larger than that in the flue gas flow rate ramp case, it indicates that system performance is more sensitive to the variation of flue gas composition than that of flue gas flow rate. In addition, control system has no effects on identifying the sensitivity of operating parameters since sensitive factors for open-loop and closed-loop controls are quite close. Control system gains energy savings in the flue gas composition ramp down case, however leads to more energy consumptions in other two cases. Control cost in the flue gas flow rate ramp case is less than that in the flue gas composition cases, which implies that more control efforts are required to maintain CO_2 product quality when composition in flue gas drifts away from its desired condition, and more attention should be paid to flue gas composition to achieve safe and robust operation.

Further research should be concentrated on applying the proposed dynamic exergy method for other chemical processes to validate its effectiveness, improving it to uncover the quantified influences of control loops and control layers on system operation, and exploring the pathways to consider economic cost into this method for achieving efficient-economic operation.

Acknowledgment

This work was supported by “The National Natural Science Foundation of China (Grants 51522603 and 51390494)”.

References

Bejan, A., Tsatsaronis, G., Moran, M., 1996. Thermal Design & Optimization. John Wiley & Sons, New York.
Bristol, E., 1966. On a new measure of interaction for multivariable process control. IEEE Trans. Autom. Control, 133–134.
Dincer, I., 2002. The role of exergy in energy policy making. Energy Procedia 30, 137–149.
Dincer, I., Rosen, M.A., 2004. Exergy as a driver for achieving sustainability. Int. J. Green Energy 1, 1–19.
Gaggioli, R., Petit, P.J., 1977. Use the Second Law, First. CHEMTECH, United States, p. 7.
Jin, B., Su, M., Zhao, H., Zheng, C., 2015a. Plantwide control and operating strategy for air separation unit in oxy-combustion power plants. Energy Convers. Manag. 106, 782–792.
Jin, B., Zhao, H., Zheng, C., 2014a. Dynamic modeling and control for pulverized-coal-fired oxy-combustion boiler island. Int. J. Greenh. Gas Control 30, 97–117.
Jin, B., Zhao, H., Zheng, C., 2014b. Dynamic simulation for mode switching strategy in a conceptual 600MWe oxy-combustion pulverized-coal-fired boiler. Fuel 137, 135–144.
Jin, B., Zhao, H., Zheng, C., 2015b. Optimization and control for CO_2 compression and purification unit in oxy-combustion power plants. Energy 83, 416–430.
Jin, B., Zhao, H., Zheng, C., 2015c. Thermoeconomic cost analysis of CO_2 compression and purification unit in oxy-combustion power plants. Energy Convers. Manag. 106, 53–60.
Jin, B., Zhao, H., Zou, C., Zheng, C., 2015d. Comprehensive investigation of process characteristics for oxy-steam combustion power plants. Energy Convers. Manag. 99, 92–101.
Luyben, W., 2002. Plantwide Dynamic Simulators in Chemical Processing and Control. CRC, New York.
Luyben, W.L., Tyréus, B.D., Luyben, M.L., 1999. Plantwide Process Control. McGraw-Hill, USA.
Meyer, L., Tsatsaronis, G., Buchgeister, J., Schebek, L., 2009. Exergoenvironmental analysis for evaluation of the environmental impact of energy conversion systems. Energy 34, 75–89.
Montelongo-Luna, J.M., Svrcek, W.Y., Young, B.R., 2011. The relative exergy array—a new measure for interactions in process design and control. Can. J. Chem. Eng. 89, 545–549.
Munir, M., Yu, W., Young, B., 2013a. Plant-wide control: eco-efficiency and control loop configuration. ISA Trans. 52, 162–169.
Munir, M., Yu, W., Young, B., 2013b. The relative exergy-destroyed array: a new tool for control structure design. Can. J. Chem. Eng. 91, 1686–1694.
Munir, M.T., Yu, W., Young, B.R., 2012. Dynamic exergy plots using exergy factor. Trans. Control Mech. Syst. 1, 13–19.
Rosen, M.A., Dincer, I., 1999. Exergy analysis of waste emissions. Int. J. Energy Res. 23, 1153–1163.
Skogestad, S., 2004. Control structure design for complete chemical plants. Comput. Chem. Eng. 28, 219–234.
Valero, A., Serra, L., Uche, J., 2006a. Fundamentals of exergy cost accounting and thermoeconomics Part II: Applications. J. Energy Resour. Technol. – ASME 128, 9–15.
Valero, A., Serra, L., Uche, J., 2006b. Fundamentals of exergy cost accounting and thermoeconomics. Part I: Theory. J Energy Resour. Technol. – ASME 128, 1–8.
Verda, V., Serra, L., Valero, A., 2004. The effects of the control system on the thermoeconomic diagnosis of a power plant. Energy 29, 331–359.
Xiong, J., Zhao, H., Zhang, C., Zheng, C., Luh, P.B., 2012a. Thermoeconomic operation optimization of a coal-fired power plant. Energy 42, 486–496.
Xiong, J., Zhao, H., Zheng, C., 2011. Exergy analysis of a 600 MWe oxy-combustion pulverized-coal-fired power plant. Energy Fuels 25, 3854–3864.
Xiong, J., Zhao, H., Zheng, C., 2012b. Thermoeconomic cost analysis of a 600 MWe oxy-combustion pulverized-coal-fired power plant. Int. J. Greenh. Gas Control 9, 469–483.